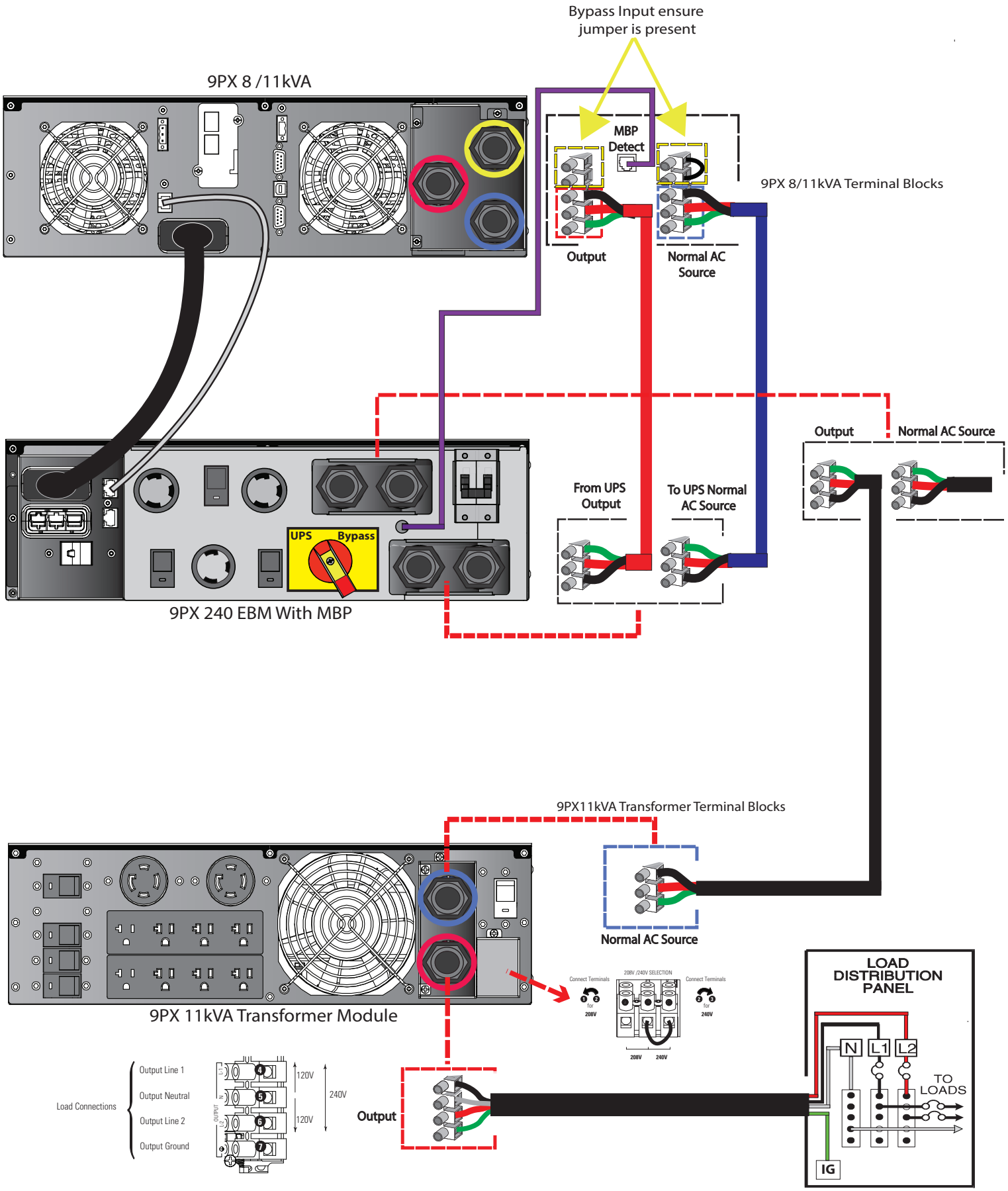9PX 8 / 11kVA UPS With MBP and 11kVA Transformer Interconnect Diagram